TEAR SHEET

Symmetric Twist Single Sconce
Item # CHD 1610AB-NP

Designer: Chapman & Myers

Height: 16"
Width: 5"
Extension: 5.25"
Backplate: 4.5" Round
Finishes: AB, AN, BZ, PN
Shade Treatments: L, NP
Shade Details: 3.5" x 5" x 4.5"
Socket: E12 Candelabra
Wattage: 60 B11
Weight: 2 Pounds
©EFC DESIGNS

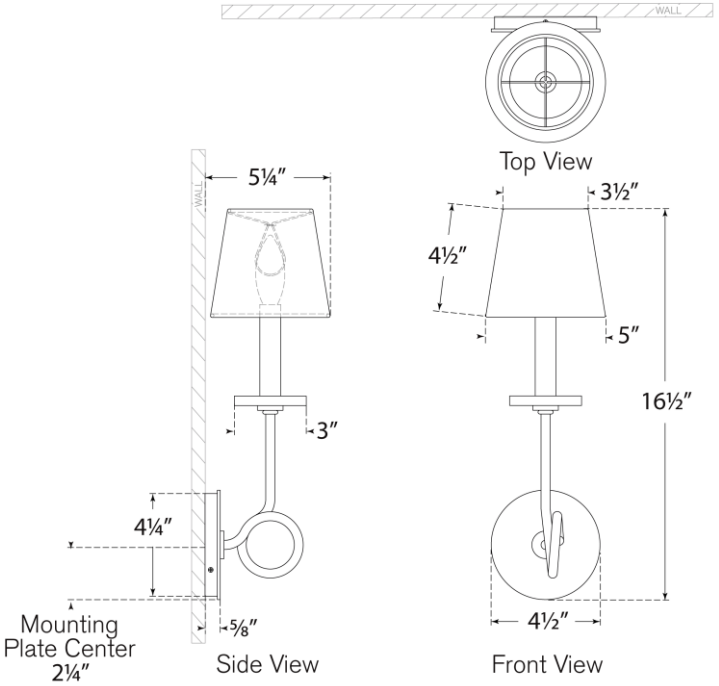

VISUAL COMFORT & CO.